Signals and Systems Tutorial-12

1)

Determine the constraint on $r = |z|$ for each of the following sums to converge:

(a) $\sum_{n=-1}^{\infty} (\frac{1}{2})^{n+1} z^{-n}$ **(b)** $\sum_{n=1}^{\infty} (\frac{1}{2})^{-n+1} z^{n}$

(c) $\sum_{n=0}^{\infty} \{\frac{1+(-1)^n}{2}\} z^{-n}$ **(d)** $\sum_{n=-\infty}^{\infty} (\frac{1}{2})^{|n|} \cos(\frac{\pi}{4} n) z^{-n}$

2)

Consider the signal

$$x[n] = \begin{cases} (\frac{1}{3})^n \cos(\frac{\pi}{4} n), & n \leq 0 \\ 0, & n > 0 \end{cases}.$$

Determine the poles and ROC for $X(z)$.

3)

Let $x[n]$ be an absolutely summable signal with rational z-transform $X(z)$. If $X(z)$ is known to have a pole at $z = 1/2$, could $x[n]$ be

(a) a finite-duration signal?
(b) a left-sided signal?
(c) a right-sided signal?
(d) a two-sided signal?

4)

Suppose that the algebraic expression for the z-transform of $x[n]$ is

$$X(z) = \frac{1 - \frac{1}{4} z^{-2}}{(1 + \frac{1}{4} z^{-2})(1 + \frac{5}{4} z^{-1} + \frac{3}{8} z^{-2})}.$$

How many different regions of convergence could correspond to $X(z)$?

5 Let $x[n]$ be a signal whose rational z-transform $X(z)$ contains a pole at $z = 1/2$. Given that

$$x_1[n] = \left(\frac{1}{4}\right)^n x[n]$$

is absolutely summable and

$$x_2[n] = \left(\frac{1}{8}\right)^n x[n]$$

is not absolutely summable, determine whether $x[n]$ is left sided, right sided, or two sided.

6)

Consider a causal LTI system whose input $x[n]$ and output $y[n]$ are related through the block diagram representation shown in Figure P10.18.

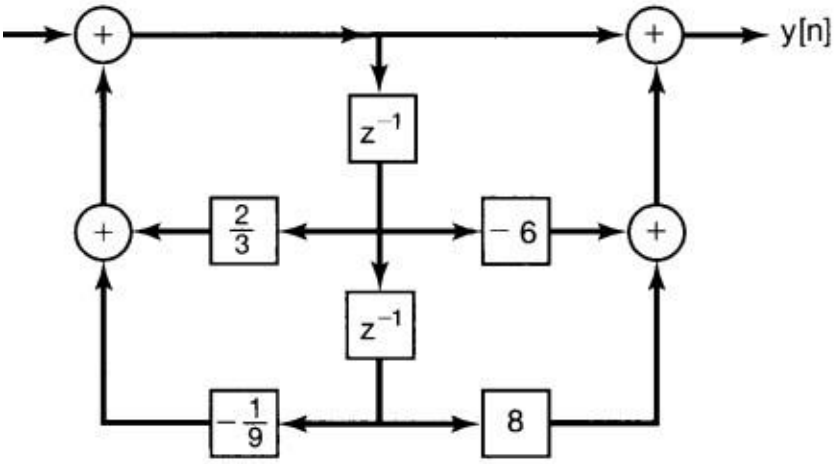

Figure P10.18

(a) Determine a difference equation relating $y[n]$ and $x[n]$.
(b) Is this system stable?

7)
A causal LTI system is described by the difference equation

$$y[n] = y[n-1] + y[n-2] + x[n-1].$$

(a) Find the system function $H(z) = Y(z)/X(z)$ for this system. Plot the poles and zeros of $H(z)$ and indicate the region of convergence.
(b) Find the unit sample response of the system.
(c) You should have found the system to be unstable. Find a stable (noncausal) unit sample response that satisfies the difference equation.

8)

Consider the digital filter structure shown in Figure P10.59.

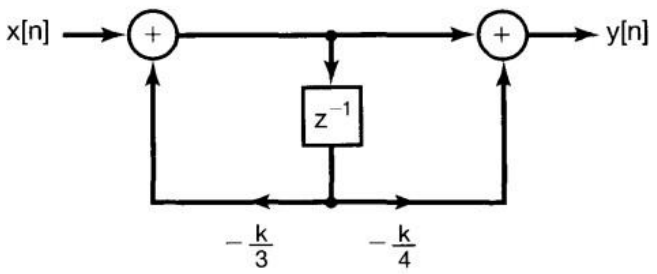

Figure P10.59

(a) Find $H(z)$ for this causal filter. Plot the pole-zero pattern and indicate the region of convergence.
(b) For what values of the k is the system stable?
(c) Determine $y[n]$ if $k = 1$ and $x[n] = (2/3)^n$ for all n.

9)
By first differentiating $X(z)$ and using the appropriate properties of the z-transform, determine the sequence for which the z-transform is each of the following:
(a) $X(z) = \log(1 - 2z),\ |z| < \frac{1}{2}$
(b) $X(z) = \log(1 - \frac{1}{2}z^{-1}),\ |z| > \frac{1}{2}$

10) $Find\ X(z)\ if\ x[n] = (1/3)^n u[n] + (1/2)^n u[-n-1].$

11) $Compute\ x[n]\ \ if$

$$X(z) = \frac{3z^2 - 5z}{z^2 - 3z + 2} \quad , |z| < 1$$

12) $Find\ x[n]\ if$

$$X(z) = \frac{z(-z^2 + 5z - 5)}{(z-2).(z-3)^2}$$

13) $If\ y[n] = x[Mn],\ \ Find\ Y(z)\ in\ terms\ of\ X(z)$